INSTALLATION TEMPLATE FOR OMNIA #7502 CUP PULL

NOTE: Template may not be true-to-size. Please use for reference purposes only. Do NOT drill until measurements are verified.

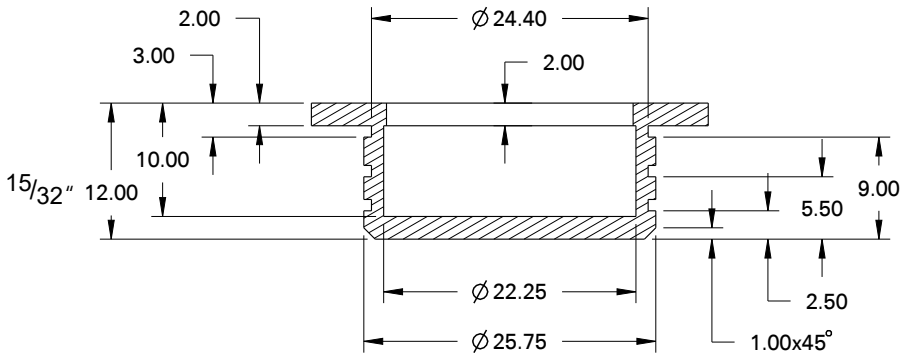

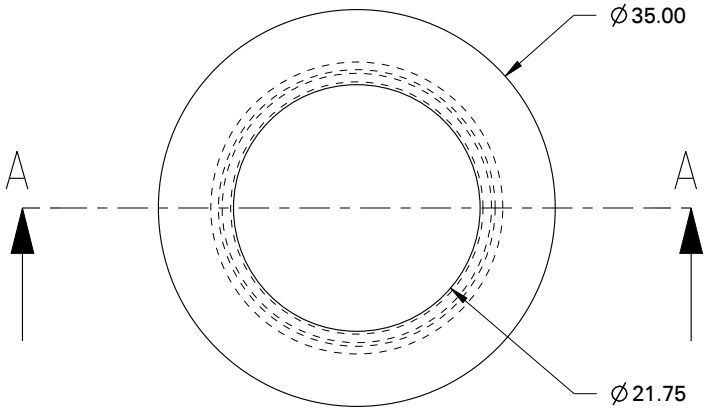

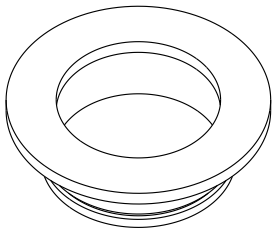

www.OmniaIndustries.com

OMNIA

Ph: 973.239.7272 F: 973.239.5960