EOMNIA

Electronic Handleset Template EH.8688

Radius Corner Faceplates and Strikes

NOTE: Template may not be true-to-size.
Please use for reference purposes only.
DO NOT DRILL until measurements are verified.

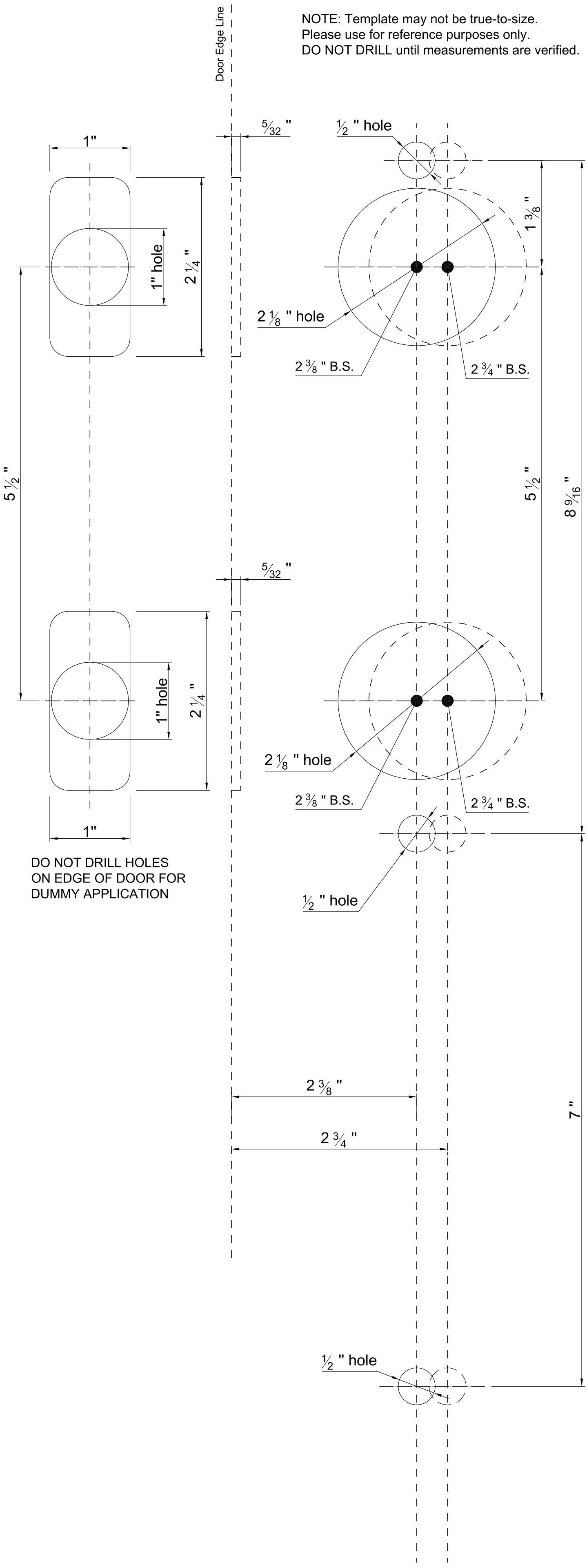

DO NOT DRILL HOLES
ON EDGE OF DOOR FOR
DUMMY APPLICATION